sales@feryster.pl

DTSN-33 NANOPERM COMMON MODE CHOKES

APPLICATIONS:

- SMPS transformers
- current transformers
- control transformers
- current compensated chokes
- chokes operating in saturation (thyristor and triac systems)

ORDERING CODE:

DTSN - 33 / 150 / 2 - V

- V: mounting: V - vertical, H - horizontal, BV - base vertical, CH - case horizontal, CV - case vertical
- 2: rated current in Amps
- 150: inductance in mH@I_{DC}= 0A
- 33: sendust core outter diameter
- DTSN: product symbol

DIMENSIONS:

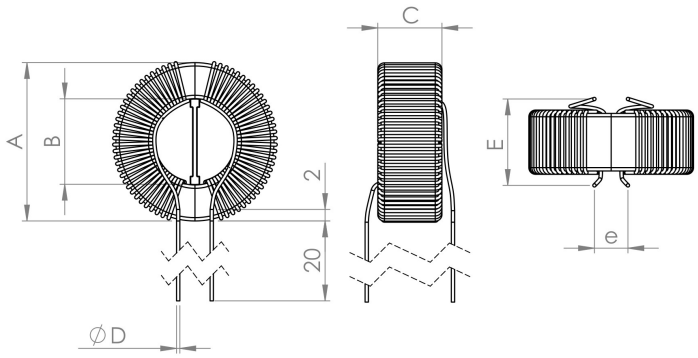

V - Vertical

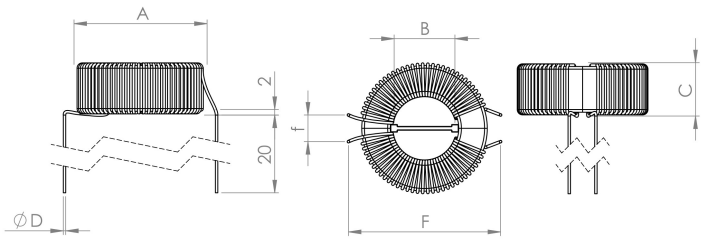

H - Horizontal

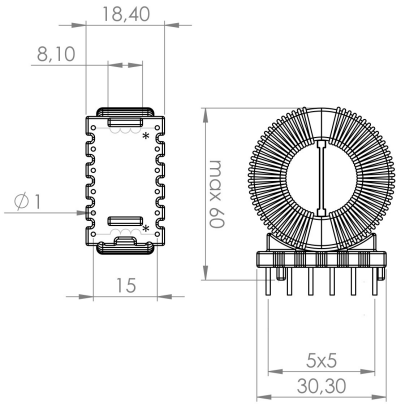

BV - Base Vertical - PODX30X18,5-12P

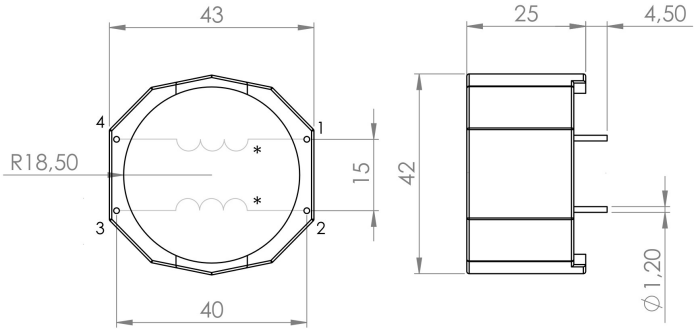

CH - Case Horizontal - OBUD-TOR-H-39X24-F

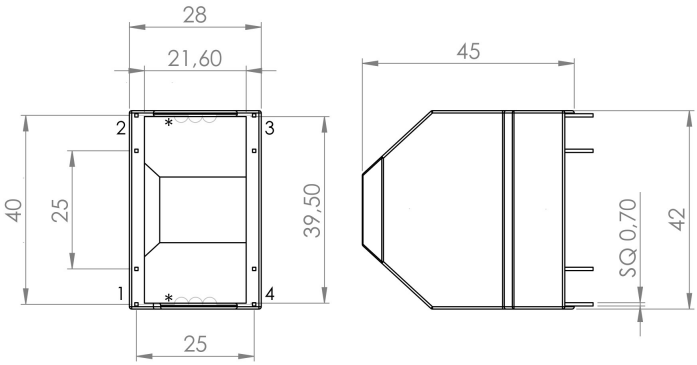

CV - Case Vertical - OBUD-TOR-VGH-42X21,5X45

Part number	Type - core dimension (± 10%)							Mounting version				
	A [mm]	C [mm]	D [mm]	E [mm]	e [mm]	F [mm]	f [mm]	V	H	BV	CH	CV
DTSN-33/150/2	37,0	15,5	2x0,35	18,0	7,0	40,0	7,0	✓	✓	✓	✓	✓
DTSN-33/100/2	37,0	15,5	2x0,35	18,0	7,0	40,0	7,0	✓	✓	✓	✓	✓
DTSN-33/68/2	37,0	15,5	2x0,35	18,0	7,0	40,0	7,0	✓	✓	✓	✓	✓
DTSN-33/47/2	37,0	15,5	2x0,35	18,0	7,0	40,0	7,0	✓	✓	–	✓	✓
DTSN-33/33/4	37,0	15,5	4x0,35	18,0	7,0	40,0	7,0	✓	✓	–	✓	✓
DTSN-33/22/6	37,0	15,5	6x0,35	18,0	7,0	40,0	7,0	✓	✓	–	–	–
DTSN-33/15/8	37,0	15,5	8x0,35	18,0	7,0	40,0	7,0	✓	✓	–	–	–
DTSN-33/10/10	37,0	15,5	10x0,35	18,0	7,0	40,0	7,0	✓	✓	–	–	–
DTSN-33/6,8/15	37,0	15,5	15x0,35	18,0	7,0	40,0	7,0	✓	✓	–	–	–
DTSN-33/4,7/20	37,0	15,5	20x0,35	18,0	7,0	40,0	7,0	✓	✓	–	–	–

ELECTRICAL PROPERTIES:

Part number	Lmax [mH]	Imax [A]	RDC [Ω]
DTSN-33/150/2	2x150	2,0	0,210
DTSN-33/100/2	2x100	2,0	0,175
DTSN-33/68/2	2x68	2,0	0,150
DTSN-33/47/2	2x47	2,0	0,076
DTSN-33/33/4	2x33	4,0	0,074
DTSN-33/22/6	2x22	6,0	0,058
DTSN-33/15/8	2x15	8,0	0,046
DTSN-33/10/10	2x10	10,0	0,042
DTSN-33/6,8/15	2x6,8	15,0	0,038
DTSN-33/4,7/20	2x4,7	20,0	0,035
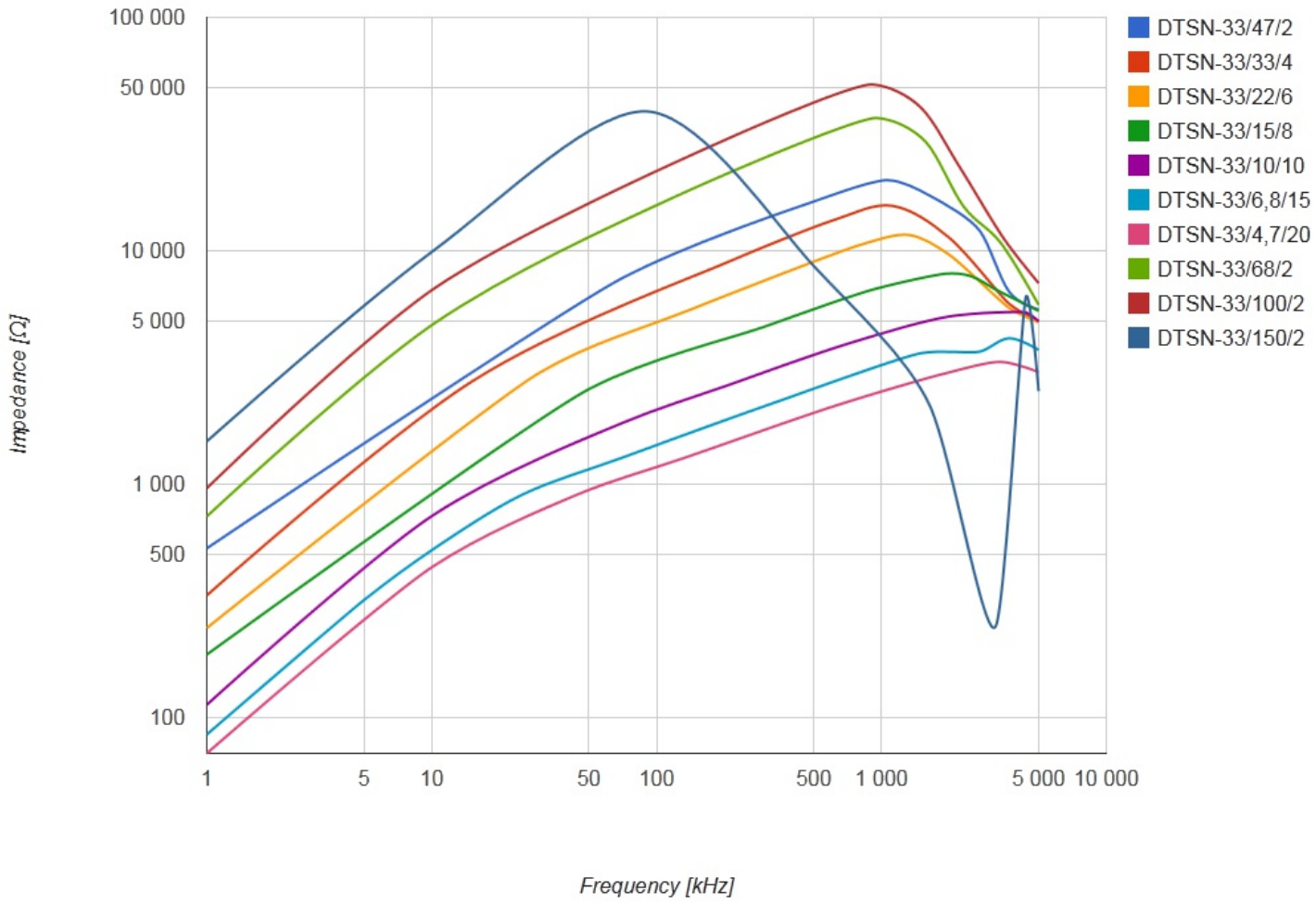
CHARACTERISTICS: