sales@feryster.pl

DTMSS - Sendust Power Inductors

APPLICATIONS:

- interference supressing chokes (DC - 300kHz)
- energy storage inductors (DC - 300kHz)
- DC/DC conventers
- SMPS
- EMI filters (DC - 1MHz)
- acoustic filters

ORDERING CODE:

DTMSS- 16 / 0,68 / 0,2 - V

- V: mounting: HX, HY, HZ - horizontal, V - vertical, CV - case vertical, CH - case horizontal, BV - base vertical, KM3 - base vertical
- 0,2: rated current in Amps
- 0,68: inductance in mH@I_{DC}=0A
- 16: Sendust core outter diameter
- DTMSS: product symbol

DIMENSIONS:

V - vertical version

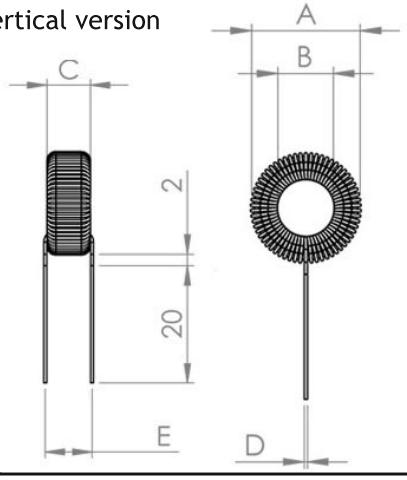

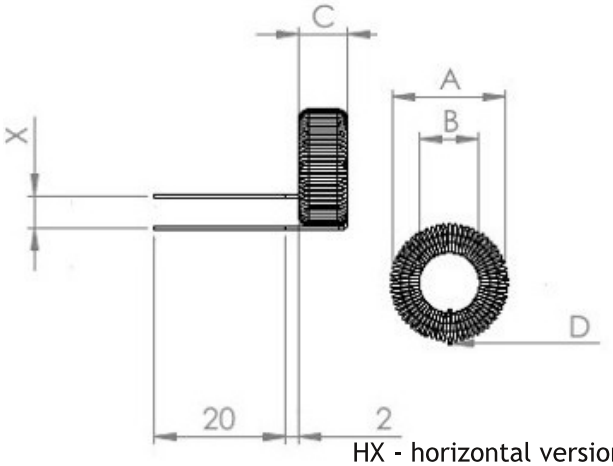

HX - horizontal version

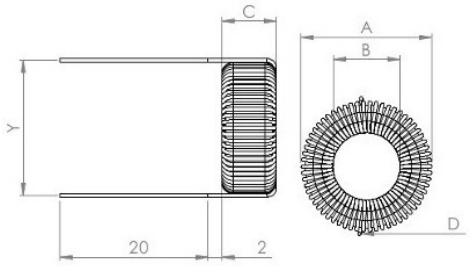

HY - horizontal version

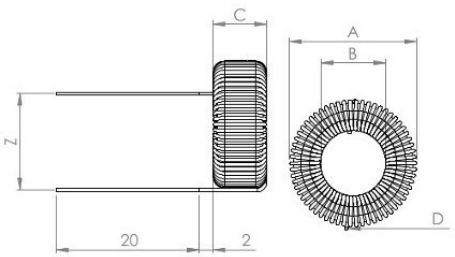

HZ - horizontal version

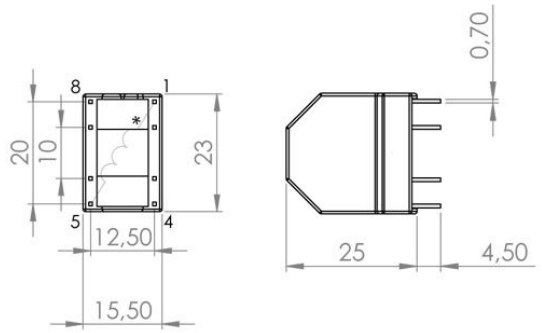

CV version
OBUD-TOR-VGH-23X11,5X25-YC
mat: FR50

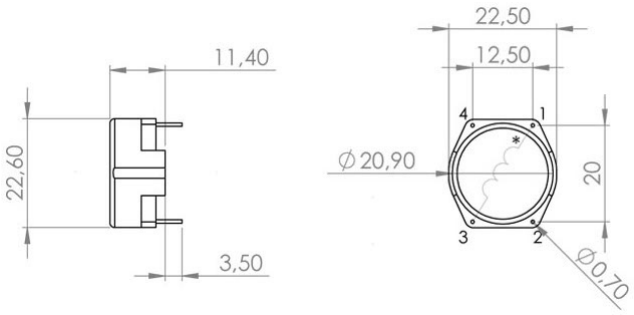

CH version
OBUD-TOR-H-20X11,5
mat: Ultramid A3X2G5 E36632
UL EIS FER-130 class B - 130ºC

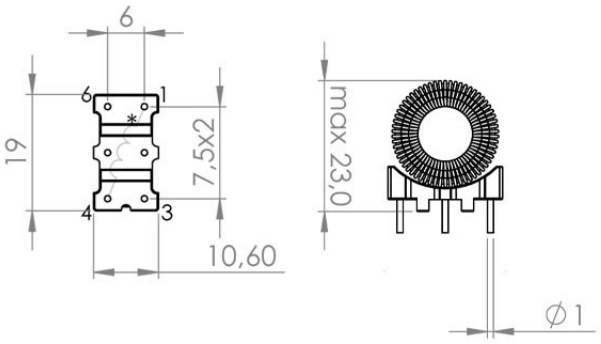

BV version
POD-19X10,6-6P-SW
mat:T375J E304813
UL EIS FER-130 class B - 130ºC

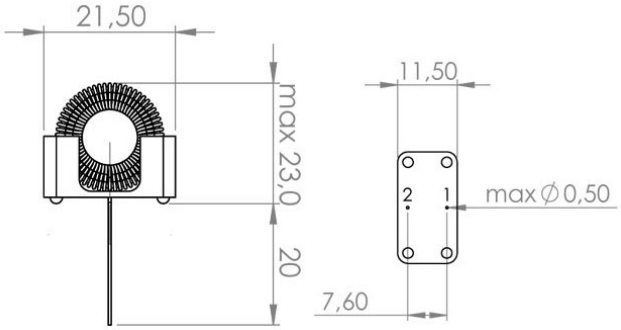

KM3 version
POD-FATR-KM3-BASE
mat:Phenolic UL-94V-0

Part number	Dimensions (±10%)								Mounting version					
	A [mm]	B [mm]	C [mm]	D [mm]	E [mm]	X [mm]	Y [mm]	Z [mm]	V	HX HY HZ	BV	CV	CH	KM3
DTMSS-16/0,68/0,2	17,5	8,5	7,5	0,16	7,0	4,5	17,5	13,0	✓	✓	✓	✓	✓	✓
DTMSS-16/0,47/0,3	18,0	8,5	7,5	0,2	7,0	4,5	18,0	13,0	✓	✓	✓	✓	✓	✓
DTMSS-16/0,33/0,4	18,0	8,5	7,5	0,25	7,0	4,5	18,0	13,0	✓	✓	✓	✓	✓	✓
DTMSS-16/0,22/0,7	18,0	8,0	8	0,30	7,0	5,0	18,0	13,0	✓	✓	✓	✓	✓	✓
DTMSS-16/0,15/1,0	18,5	8,0	8	0,35	7,0	5,0	18,5	13,0	✓	✓	✓	✓	✓	✓
DTMSS-16/0,10/1,6	18,5	7,0	9	0,45	8,0	5,0	18,5	13,0	✓	✓	✓	✓	✓	✓
DTMSS-16/0,068/2,0	18,5	7,0	9	0,50	8,0	5,0	18,5	13,0	✓	✓	✓	✓	✓	✓
DTMSS-16/0,047/4,0	20,0	5,5	9,5	1,00	8,0	7,0	20,0	13,0	✓	✓	-	✓	✓	-
DTMSS-16/0,033/6,0	20,0	5,0	10	1,25	9,0	7,5	20,0	13,0	✓	✓	-	-	-	-
DTMSS-16/0,022/8,0	20,0	4,5	10	1,50	9,0	8,0	20,0	13,0	✓	✓	-	-	-	-
DTMSS-16/0,015/10	21,0	3,5	10,5	1,60	9,0	8,0	21,0	13,0	✓	✓	-	-	-	-
DTMSS-16/0,010/15	22,0	2,25	11	2,00	9,0	8,0	22,0	13,0	✓	✓	-	-	-	-
DTMSS-16/0,0068/20	22,0	1,2	12	2,80	9,0	10,5	22,0	13,0	✓	✓	-	-	-	-

ELECTRICAL PROPERTIES:

Part number	L_{nom} [µH]	I_{nom} [A]	$L@I_{nom}$ [µH]	R_{DC} [Ω]	$\Delta T@I_{nom}$ [°C] *
DTMSS-16/0,68/0,2	680	0,20	673	2,48	6,6
DTMSS-16/0,47/0,3	470	0,30	464	1,23	7,6
DTMSS-16/0,33/0,4	330	0,40	324	0,907	10,6
DTMSS-16/0,22/0,7	220	0,70	212	0,460	12,6
DTMSS-16/0,15/1,0	150	1,00	140	0,239	13,0
DTMSS-16/0,10/1,6	100	1,60	89	0,123	16,0
DTMSS-16/0,068/2,0	68	2,00	61	0,0876	20,0
DTMSS-16/0,047/4,0	47	4,00	36	0,0453	36,3
DTMSS-16/0,033/6,0	33	6,00	23	0,0245	41,3
DTMSS-16/0,022/8,0	22	8,00	15	0,0166	46,3
DTMSS-16/0,015/10	15,0	10,0	10	0,00856	31,6
DTMSS-16/0,010/15	10,0	15,0	5,3	0,00430	37,1
DTMSS-16/0,0068/20	7,0	20,0	3,5	0,00318	37,7

* winding losses only.

CHARACTERISTICS:

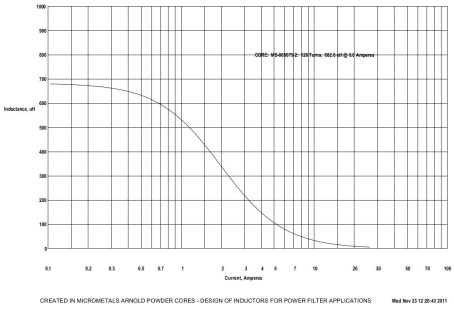

DTMSS-16/0,68/0,2

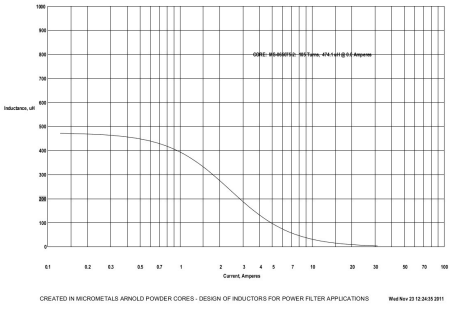

DTMSS-16/0,47/0,3

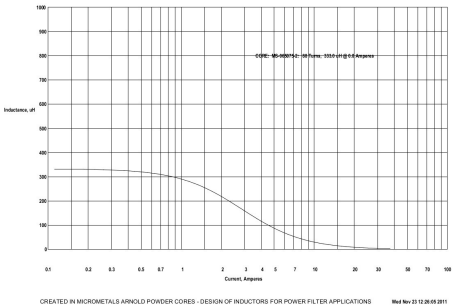

DTMSS-16/0,33/0,4

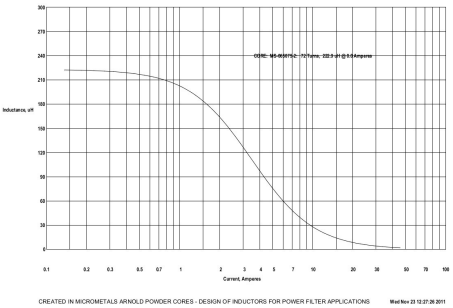

DTMSS-16/0,22/0,7

CHARACTERISTICS:

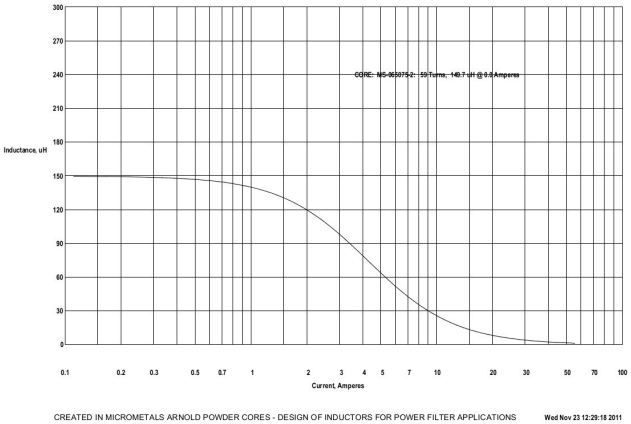

DTMSS-16/0,15/1,0

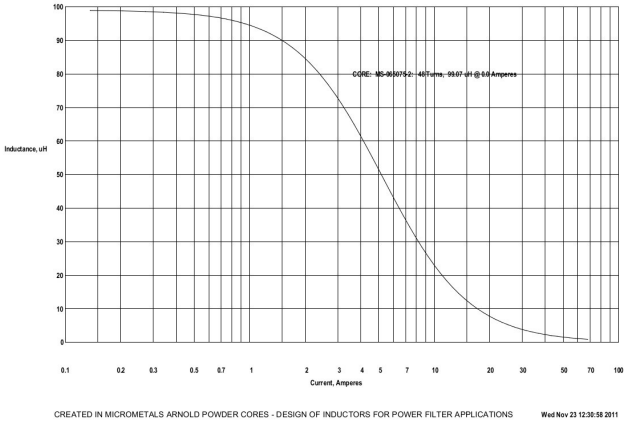

DTMSS-16/0,1/1,6

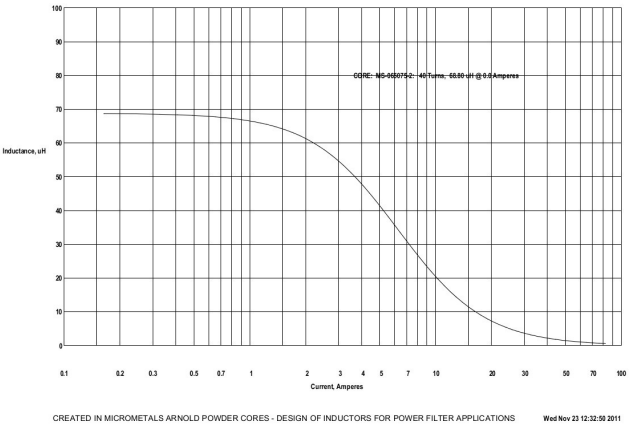

DTMSS-16/0,068/2,0

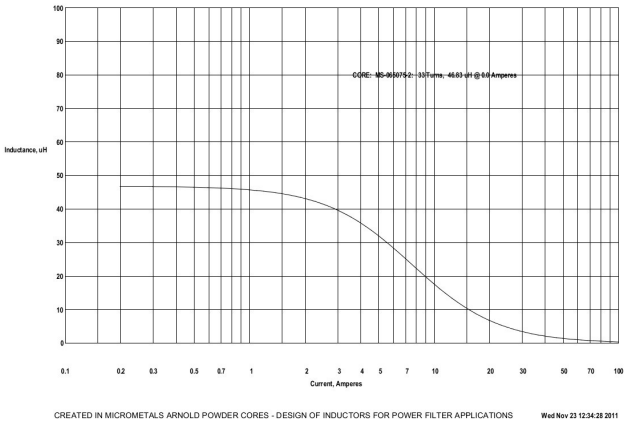

DTMSS-16/0,047/4,0

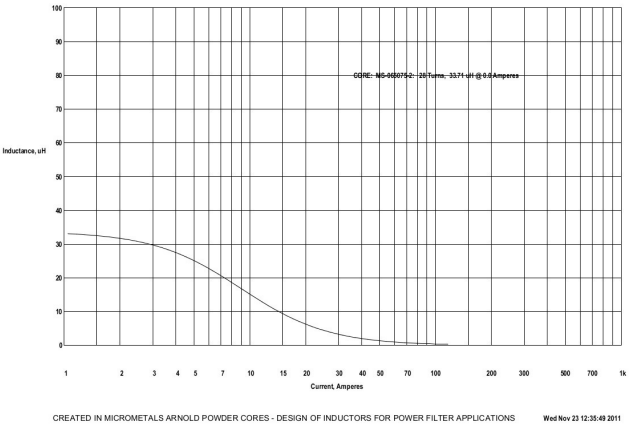

DTMSS-16/0,033/6,0

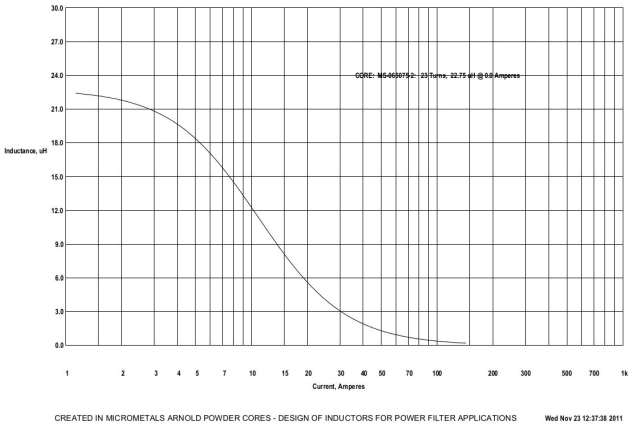

DTMSS-16/0,022/8,0

CHARACTERISTICS:

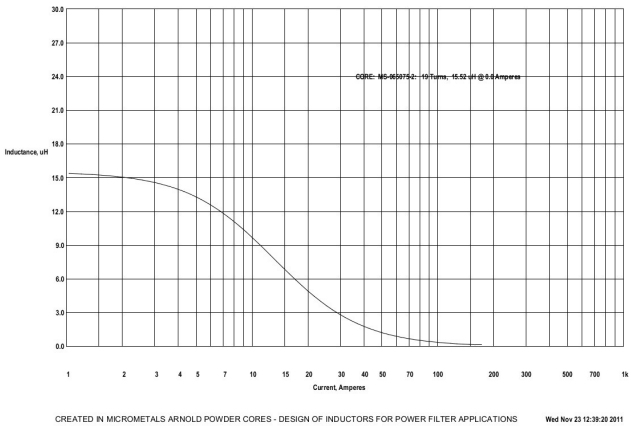

DTMSS-16/0,015/10

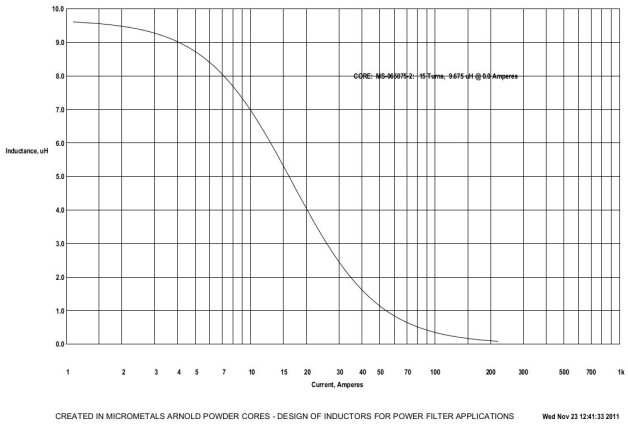

DTMSS-16/0,01/15

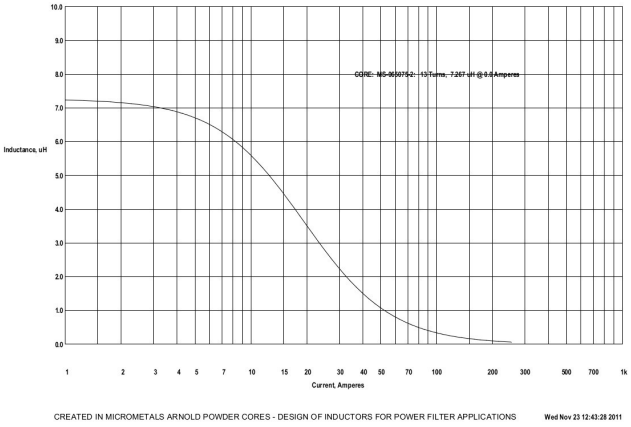
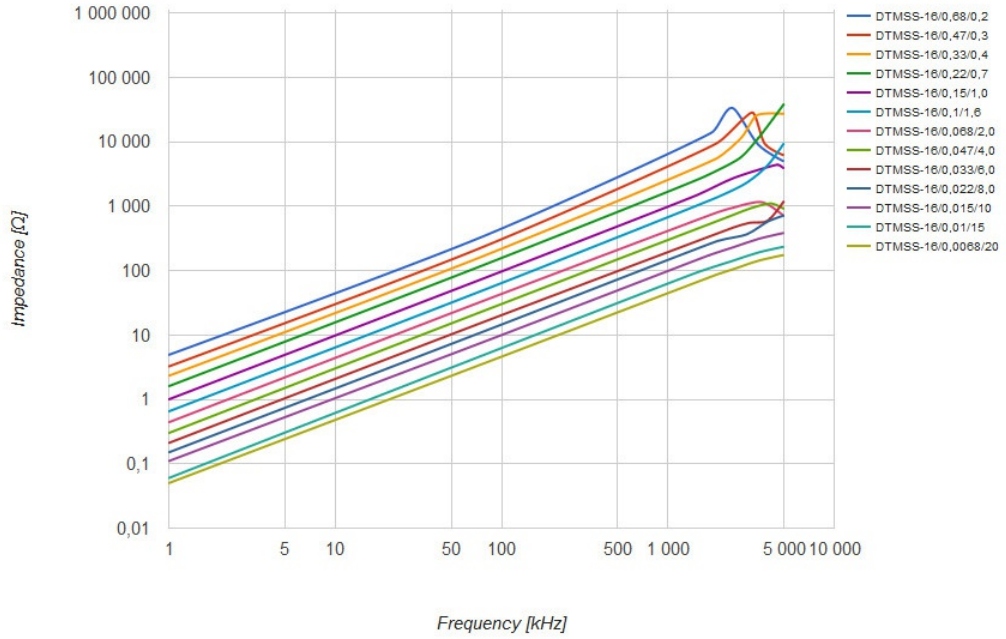
DTMSS-16/0,0068/20